Mediterranean Dig Diagram

It is important to have your excavator call to review the dig diagram prior to any excavation(1-800-305-5931)

Pool Specifications

Length: 26'
Width: 13'
Depth: 3'6" - 6'
Perimeter: 75'
Square Footage: 300 Sq. Ft.
Capacity: 7,100 Gallons
Material: Fiberglass

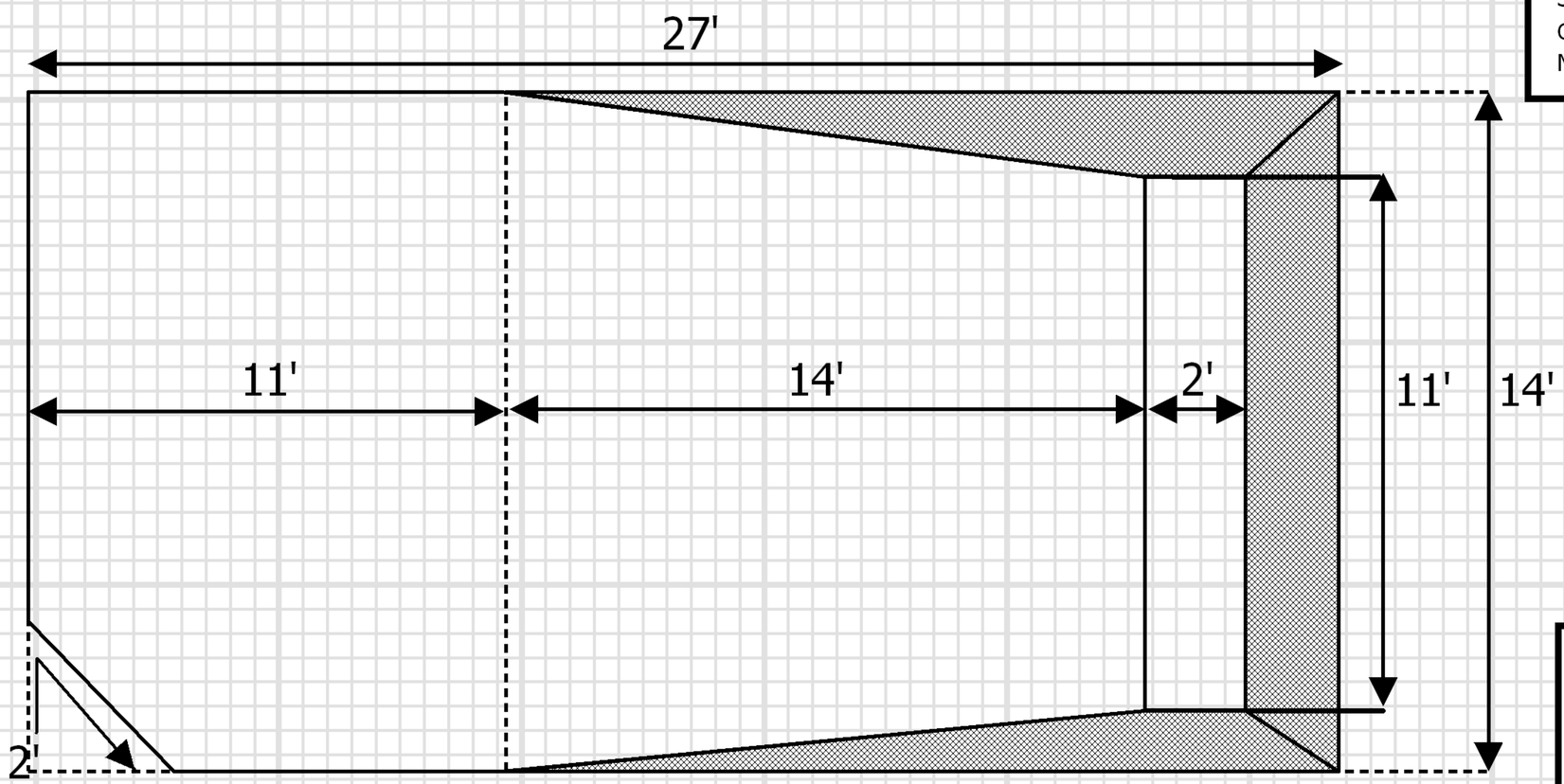

Materials Needed

Block 8x8x16: 10
Block Caps: 2

*** Approximate Dimensions Shown ***

Outside Dimensions

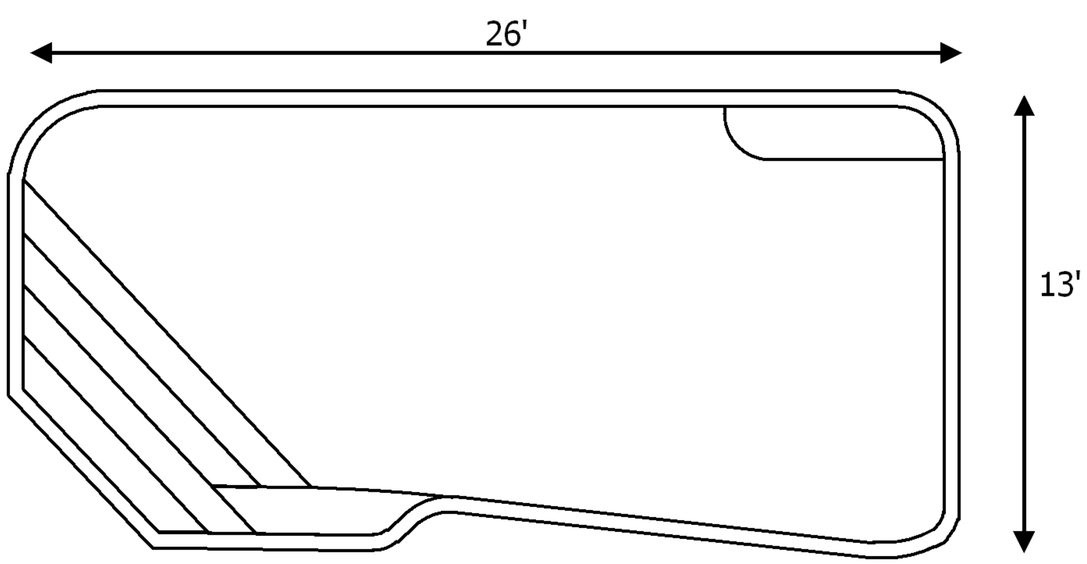
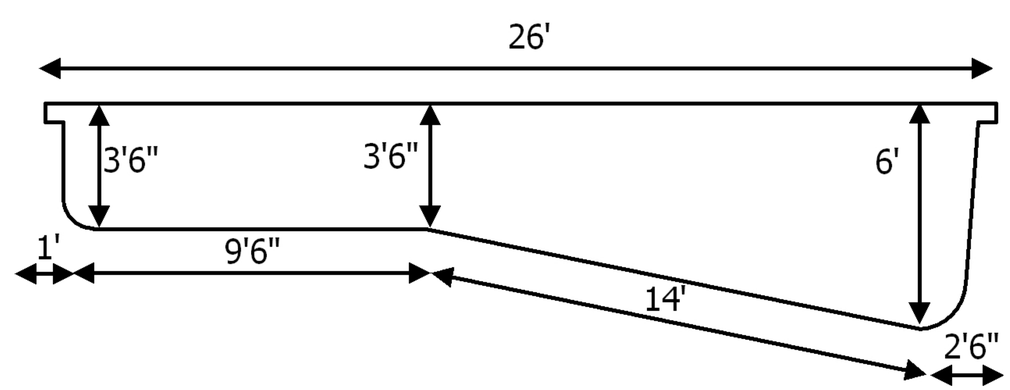
Depth Chart