14x36 Beach Entry Dig Diagram

It is important to have your excavator call to review the dig diagram prior to any excavation(1-800-305-5931).

Pool Specifications

Length: 36'
Width: 14'
Depth: 3'9" - 5'1 0'
Perimeter: 93'
Square Footage: 440 Sq. Ft.
Capacity: 9,500 Gallons
Material: Fiberglass

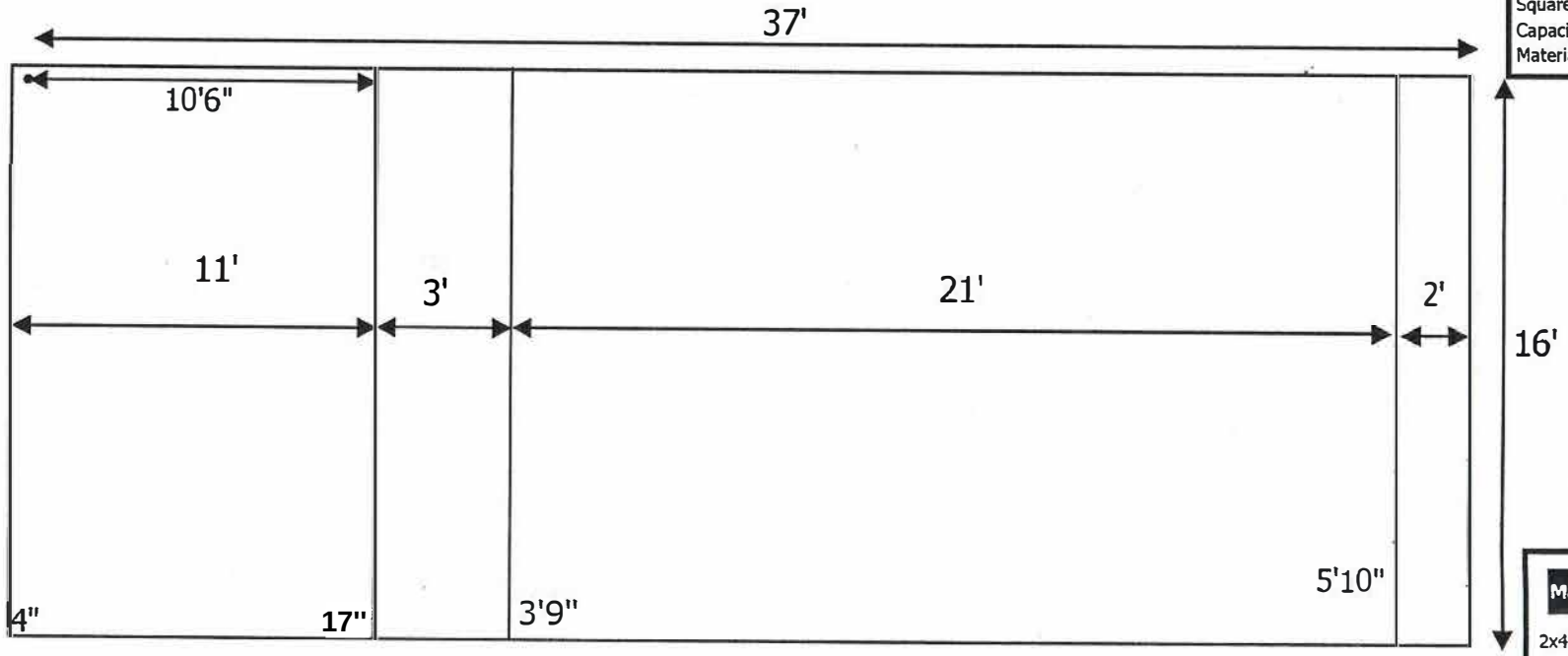

Materials Needed

2x4x16: 3
2x6x16: 3
4x4x8: 2

*** Approximate Dimensions Shown ***

Outside Dimensions

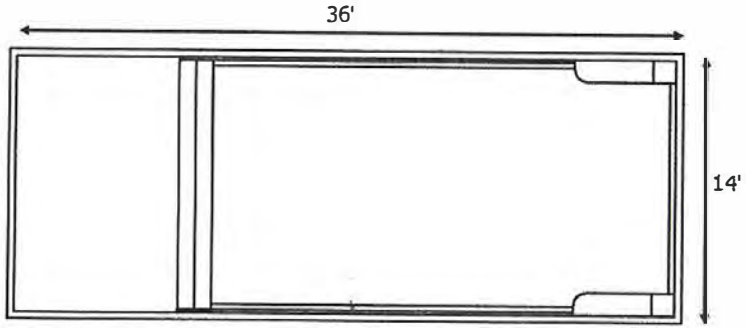
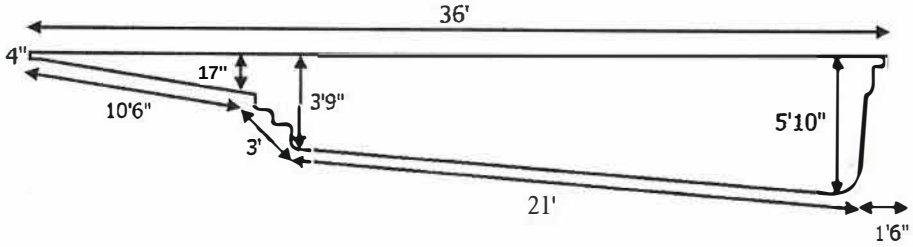
Depth Chart